R04

EYELA

Stirrer Mazela

Instruction Manual

ZZ-1000・ZZ-1000S
ZZ-1100・ZZ-1100S
ZZ-1200・ZZ-1200S
ZZ-1300・ZZ-1300S
ZZ-1010
ZZ-1110
ZZ-1210
ZZ-1310

This instruction manual is designed to use the product efficiently and safely with keeping its best performance.

IMPORTANT **Be sure to read “Safety precautions” before use.**

Please keep this manual in a place easily accessible to every user.

Tokyo Rikakikai Co., Ltd.

IMPORTANT SAFETY INFORMATION

1. Warning signal word

Using a flammable or combustible liquid as a coolant for this product may result in a personal injury or an accidents when the product is improperly handled. Also, operating the unit under a relatively high room temperature may decrease its performance or cause a malfunction due to its functions or characteristics.
Most of such troubles, however, can be prevented if you are well informed about them beforehand.

To ensure the safety, this manual defines the information on such matters as requiring particular care in the safety as follows in terms of the importance and risk and attaches the alert mark and signal word.
It is recommended to follow the instruction to ensure the safe use of the product.

Alert mark Signal word	Definition
⚠DANGER	Danger of death or severe injury is expected when handled improperly.
⚠Warning	Wrong handling is assumed to cause the possibility of the death or heavy injury of the user.
⚠Caution	Wrong handling is assumed to cause the risk of injury of the operator or physical damages.

We have undertaken thorough verification concerning the possible occurrence of risk in the course of use of the product, but prediction of all and every kind of risk is extremely difficult. Namely, cautions contained in this manual are not necessarily all of possible risks.

However, if the product is operated according to the procedure described in this manual, the safe operation and work is ensured. Be sure to pay utmost care during handling of the product to prevent accident or failure of the product.

2. Warning Display on the Product

For particularly important warning instructions, the warning label is provided to the product main body.

The labelling position is shown below.

When using the product, be sure to pay due attention to the description of the warning.

* If damaged and illegible, be sure to change the warning label to the new one.
  Send the request for the new label to us.

●Mazela ZZ Series (ZZ-1000 & 1010 Series)

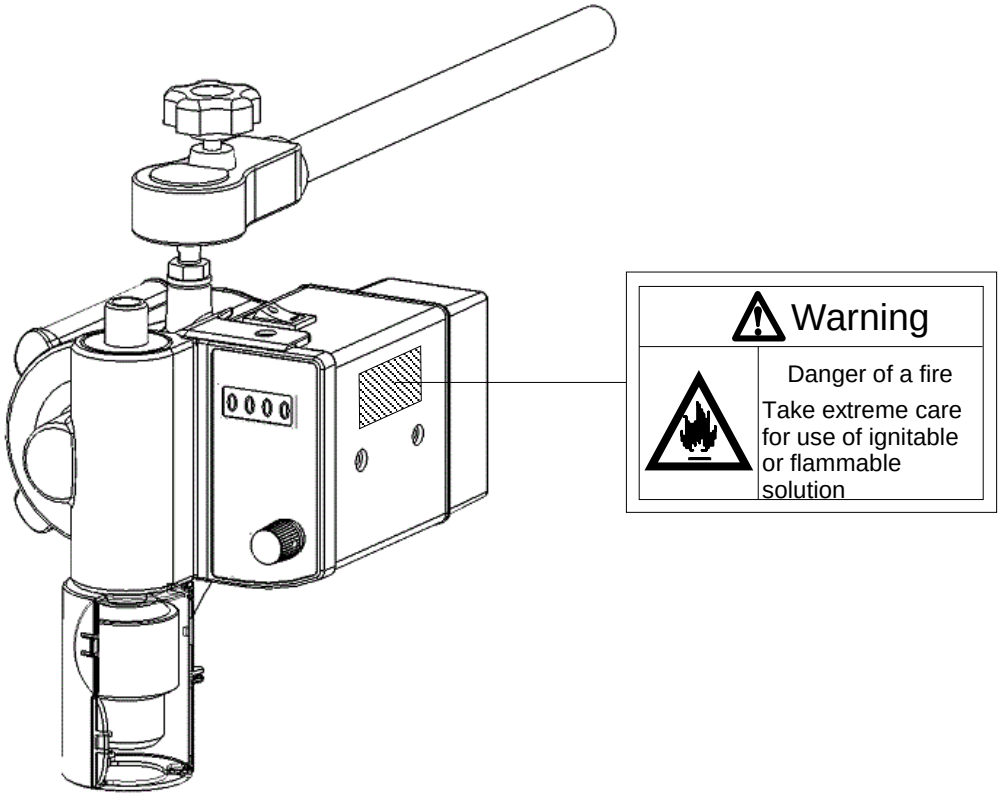

Thank you for purchasing our
EYELA product.

Introduction

This instruction manual explains installation, operation, troubleshooting, maintenance and inspection, and discarding procedures for the products below:

Always read this manual before use to ensure familiarization of the product.

Mazela ZZ series

＜ZZ-1000 series ＞

- ZZ-1000
- ZZ-1000S
- ZZ-1100
- ZZ-1100S
- ZZ-1200
- ZZ-1200S
- ZZ-1300
- ZZ-1300S

＜ZZ-1010 series ＞

- ZZ-1010
- ZZ-1210
- ZZ-1110
- ZZ-1310

Table of contents

1. For safe operation 1
2. Product overview
   - 2-1 Application 2
   - 2-2 Operating procedures 2
   - 2-3 Specification 2
   - 2-4 Performance（Reference data） 3
   - 2-5 Names of parts 4
3. Names and functions of the control assembly
   - 3-1 Control panel 5
   - 3-2 Safety, Alarm and Warning functions 6
   - 3-3 About the protection function 7
     - 3-3-1 Thermal protector (Overheat protection circuit) 7
     - 3-3-2 Current restriction circuit 7
4. Installation
   - 4 - 1 Installation environment 8
   - 4 - 2 Installation conditions 8
   - 4 - 3 Connecting the utilities 9
5. Operation
   - 5-1 Preparing for operation 10
     - 5-1-1 Installing the main unit 10
     - 5-1-2 How to open/close the chuck cover 11
     - 5-1-3 Preparing the stirrer blade and the stirrer bar 12
     - 5-1-4 How to install and remove the stirrer bar 13
     - 5-1-5 How to replace collets 16
     - 5-1-6 Air purge 17
     - 5-1-7 Adjusting the position of the main unit 18
     - 5-1-8 Connecting the power plug 18
   - 5-2 Operating methods 18
6. Causes and solutions of troubles 19
7. Maintenance and Inspection
   - 7-1 Cleaning and care of the product 20
   - 7-2 Adjusting the chuck cover 20
8. Disposal of the product 21
9. After-sale Services 22
10. List of consumable and replacement parts 23

Items contained in your packing

Be sure to confirm the type and quantity of parts before setting.

■Model ZZ-1000, 1100
Model ZZ-1200, 1300

	Contents	Qty
1	Main unit (drill chuck)	1
2	Clamp	1
3	Chuck handle	1
4	Operation manual	1
5	Warranty card	1

■Model ZZ-1000S, 1100S
Model ZZ-1200S, 1300S

	Contents	Qty
1	Main unit (drill chuck)	1
2	Clamp	1
3	Chuck handle	1
4	Operation manual	1
5	Warranty card	1
6	Stirrer bar(φ8×495mm SUS)	1
7	Screw	1
8	Stirrer blade (φ50mm SUS) Marine type	1

■Model ZZ-1010, 1110
Model ZZ-1210, 1310

	Contents	Qty
1	Main unit (collet chuck)	1
2	Clamp	1
3	Operation manual	1
4	Warranty card	1

■Main unit

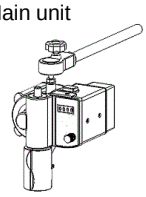

■Clamp

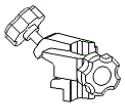

■Chuck handle

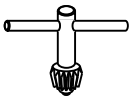

■Stirrer bar
■Screw

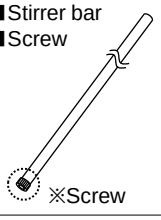

■Stirrer blade
Marine type

1 For safe operation

This product is not of an explosion-proof construction. Take extreme care for safety when operating this unit.

⚠ **Warning**	**Take extreme care for use of ignitable or flammable solutions** Ignitable or flammable solutions will evaporate when stirred and heated and may ignite and explode if ignited at the motor assembly of the unit. When using such a solution, make a vent hole on the container and discharge vapor to the external through a tube or use the unit in a draft chamber and take extreme care.
⚠ **Caution**	**Do not rotate the flexible stirrer in the left direction** Do not use a flexible stirrer specified for a drill chuck, which stirrer may cause the drill chuck to loose to allow the stirrer bar to fall and damage glassware when it is rotated left (anti-clockwise when the product is looked from above).
⚠ **Caution**	**Close the chuck cover before using the unit** Never fail to close the chuck cover beforehand to prevent hair or clothing from being caught with the drill chuck or the collet chuck.
⚠ **Caution**	**Check that the free clamp is secure before using** Operating with the loose free clamp will make the stirrer bar flatter and damage glassware. Be sure to securely tighten the knob bolt and the main unit is held in place before attempting operation. 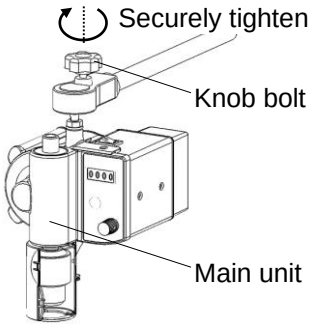
⚠ **Caution**	**Use the specified stirrer blades only** Never use a stirrer blade other than those specified by us (in particular, larger ones), which might cause a malfunction of the stirrer. ※Refer to the ”10. List of consumable or replacement parts” on P.23 for stirrer blades recommended by us.
⚠ **Caution**	**Do not repeat switching ON/OFF in a short time (within 15 seconds)** Switching power ON/OFF in a short time (within 15 seconds) might cause a malfunction of the unit. Be sure to check the indication has completely disappeared before switching ON again to restart the unit.

2 Product overview

2-1 Application

⚠ WARNING

Never attempt to modify the product.
Operate the unit for the specified purpose only.

An electric shock or a malfunction may result if the product is modified or used for any purposes other than that specified.

This product is a stirrer that supports mixing, solving or reacting of reagents.

2-2 Operating procedures

You can set a speed according to the application.
Turn the speed control knob on the control panel to set to a speed you want.

You can change the speed during operation or stop operation when necessary.
See “5-2 Controlling methods” on P.18 for details.

2-3 Specification

Model			ZZ-1000	ZZ-1000S	ZZ-1010
Type			Standard		With reverse function
Performance	Speed range	rpm	50～3000		
	Max. torque	N・m/rpm	0.098/3000		
		kgf・cm/rpm	1/3000		
Standard	Motor output		DC brushless motor 35W		
	Rated torque		0.098N・m(1kgf・cm)/3000rpm		
	Shaft dia. [mm]		φ1～8		φ8(standard)
	Chuck assy.		Drill chuck		Collet chuck
Function	Rotation control		Speed feedback control		
	Speed setting and indication		Volume setting & digital indication: 4 digit		
	Safety function		Thermal protector (overheat protection circuit), current restriction circuit, chuck cover		
	Included function		Slow up/down, free clamp		
Operating env. temp. range			5～35℃		
Ext. size[mm] ※1 ※2			130W×155D×158H (130W×172D×173H)		
Mass			Approx. 2.5kg		
Power input & source voltage			AC100V 50/60Hz ・2A 200VA		

Model			ZZ-1100	ZZ-1100S	ZZ-1110
Type			Standard		With reverse function
Performance	Speed range	rpm	20～1200		
	Max. torque	N・m/rpm	0.245/1200		
		kgf・cm/rpm	2.5/1200		
Standard	Motor output		DC brushless motor 35W		
	Rated torque		0.098N・m(1kgf・cm)/3000rpm		
	Shaft dia. [mm]		φ1～10		φ8(standard)
	Chuck assy.		Drill chuck		Collet chuck
Function	Rotation control		Speed feedback control		
	Speed setting and indication		Volume setting & digital indication: 4 digit		
	Safety function		Thermal protector (overheat protection circuit), current restriction circuit, chuck cover		
	Included function		Slow up/down, free clamp		
Operating env. temp. range			5～35℃		
Ext. size[mm] ※1 ※2			130W×155D×158H (130W×172D×173H)		
Mass			Approx.2.5kg		
Power input & source voltage			AC100V 50/60Hz ・2A 200VA		

※1 Sizes in ( ) include protrusions.
※2 Depth when a free clamp is installed is 362[mm].
※ The performance shown is at a room temperature of 20℃, rated source voltage, 50Hz and no-load.

Model			ZZ-1200	ZZ-1200S	ZZ-1210
Type			Standard		With reverse function
Performance	Speed range	rpm	10～600		
	Max. torque	N・m/rpm	0.49/600		
		kgf・cm/rpm	5/600		
Standard	Motor output		DC brushless motor 35W		
	Rated torque		0.098N・m(1kgf・cm)/3000rpm		
	Shaft dia. [mm]		φ1～10		φ8(standard
	Chuck assy.		Drill chuck		Collet chuck
Function	Rotation control		Speed feedback control		
	Speed setting and indication		Volume setting & digital indication: 4 digit		
	Safety function		Thermal protector (overheat protection circuit), current restriction circuit, chuck cover		
	Included function		Slow up/down, free clamp		
Operating env. temp. range			5～35℃		
Ext. size[mm] ※1 ※2			130W×155D×158H (130W×172D×173H)		
Mass			Approx. 2.5kg		
Power input & source voltage			AC100V 50/60Hz ・2A 200VA		

Model			ZZ-1300	ZZ-1300S	ZZ-1310
Type			Standard		With reverse function
Performance	Speed range	rpm	5～300		
	Max. torque	N・m/rpm	0.98/300		
		kgf・cm/rpm	10/300		
Standard	Motor output		DC brushless motor 35W		
	Rated torque		0.098N・m(1kgf・cm)/3000rpm		
	Shaft dia. [mm]		φ1～10		φ8(standard
	Chuck assy.		Drill chuck		Collet chuck
Function	Rotation control		Speed feedback control		
	Speed setting and indication		Volume setting & digital indication: 4 digit		
	Safety function		Thermal protector (overheat protection circuit), current restriction circuit, chuck cover		
	Included function		Slow up/down, free clamp		
Operating env. temp. range			5～35℃		
Ext. size[mm] ※1 ※2			130W×155D×158H (130W×172D×173H)		
Mass			Approx. 2.5kg		
Power input & source voltage			AC100V 50/60Hz ・2A 200VA		

※1 Sizes in ( ) include protrusions.
※2 Depth when a free clamp is installed is 362[mm].
※ The performance shown is at a room temperature of 20℃, rated source voltage, 50Hz and no-load.

＜Accessories＞

ZZ-1000,1100,1200,1300	Clamp x 1, chuck handle x 1
ZZ-1000S,1100S,1200S,1300S	Clamp x 1, chuck handle x 1 Stirrer bar x 1 (φ8×495mm, SUS), stirrer blade of marine type x 1 (φ50mm, SUS)
ZZ-1010,1110,1210,1310	Clamp x 1

2-4 Performance（Reference data）

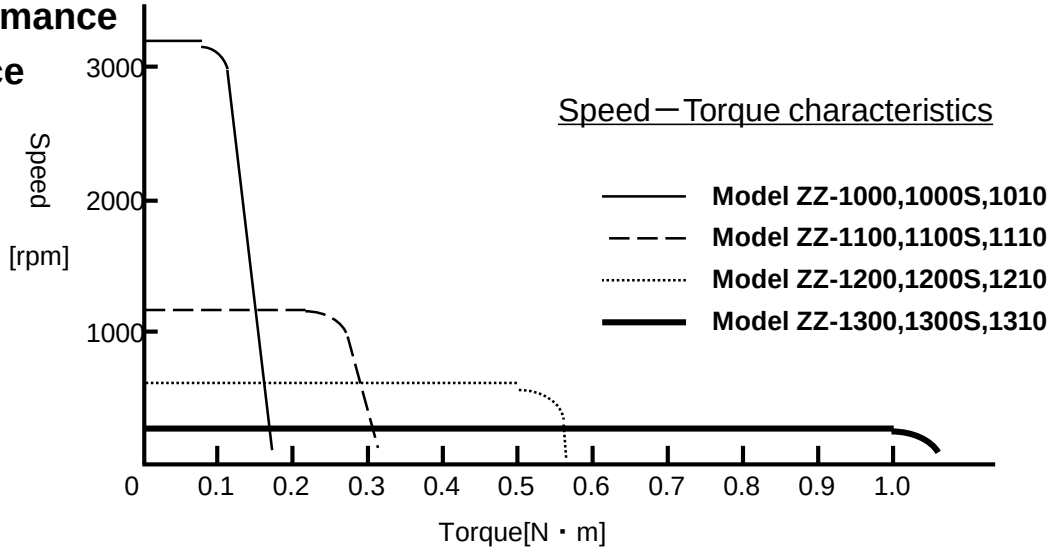

2-5 Names of parts

ZZ-1000 ZZ-1000S ZZ-1100 ZZ-1100S
ZZ-1200 ZZ-1200S ZZ-1300 ZZ-1300S

＜ Front ＞

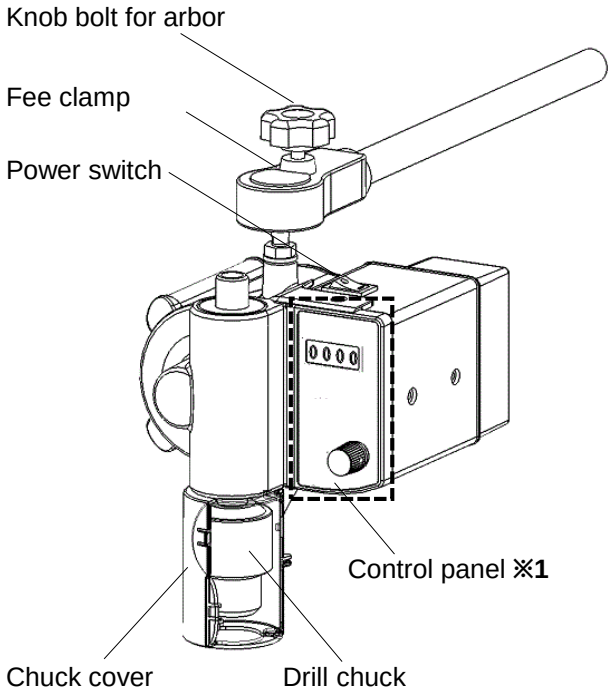

＜ Back ＞

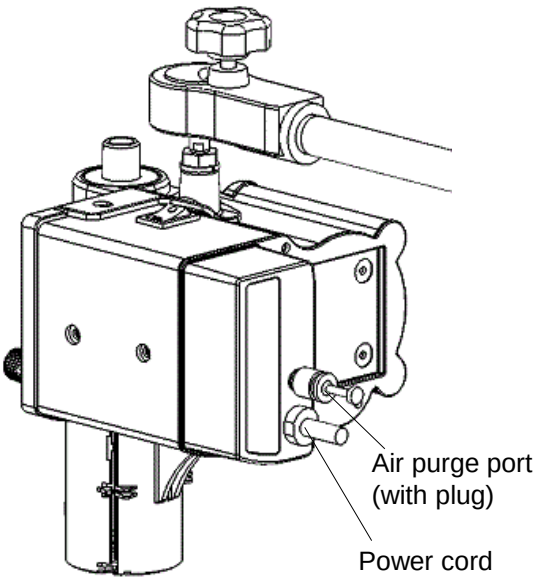

ZZ-1010 ZZ-1110 ZZ-1120 ZZ-1130

＜Front＞

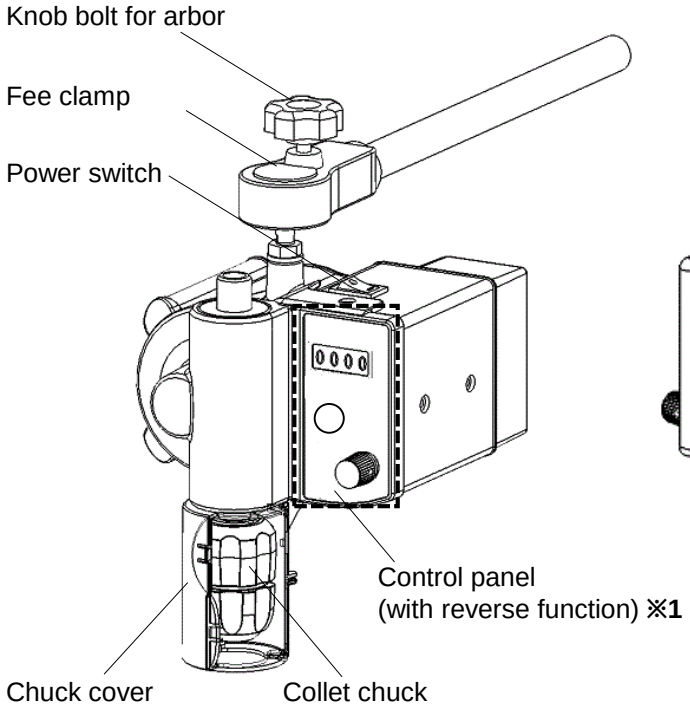

＜Back＞

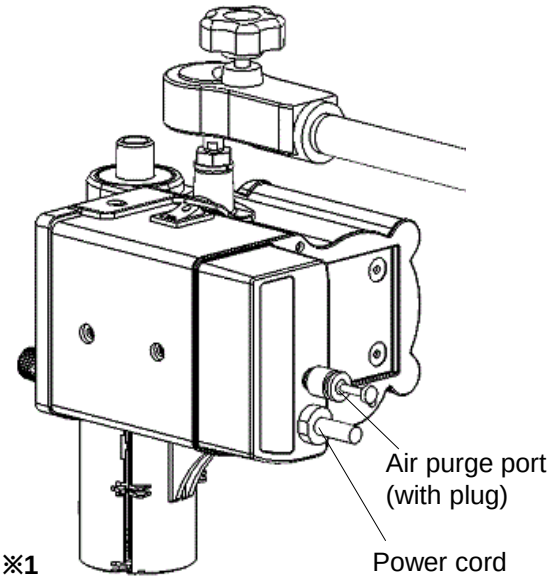

※1 See “3-1 Control panel” on P.5 for details of the control panel.

3 Names and functions of the control assembly

3-1 Control panel

ZZ-1000 ZZ-1000S ZZ-1100 ZZ-1100S
ZZ-1200 ZZ-1200S ZZ-1300 ZZ-1300S

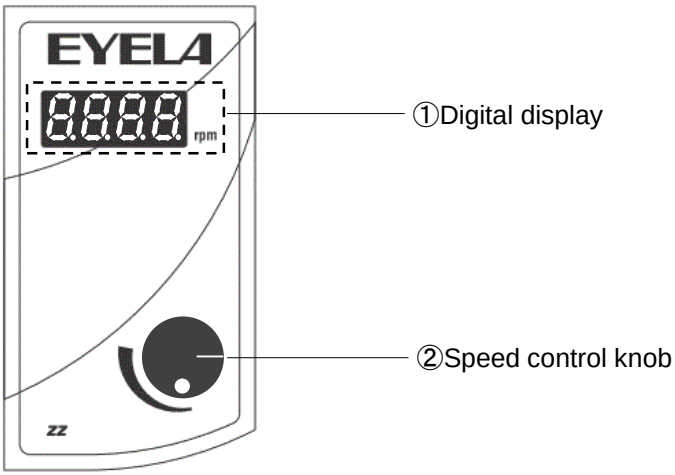

No.	Name	Description of the functions
①	Digital display	Indicates the current speed. Indicates an alarm No. when a malfunction occurred to the unit.
②	Speed control knob	You can change the speed by turning this knob. The further you turn this clockwise, the higher the speed of the unit will be.

ZZ-1010 ZZ-1110 ZZ-1120 ZZ-1130

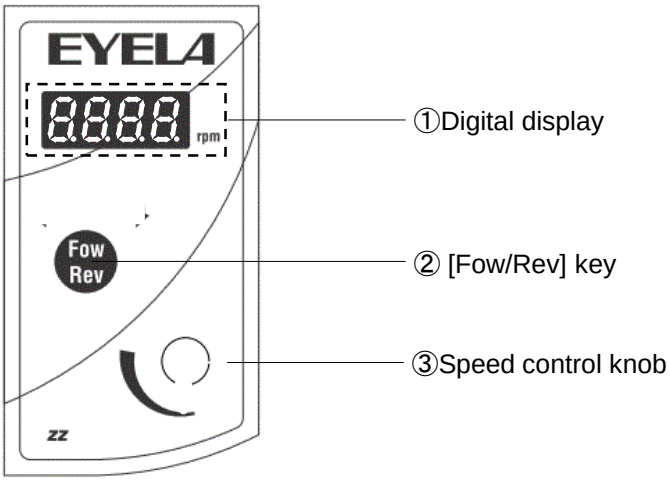

No.	Name	Description of the functions
①	Digital display	Indicates the current speed. Indicates an alarm No. when a malfunction occurred to the unit.
②	[Fow/Rev] key	Toggles the rotation direction [Left←→Right].
③	Speed control knob	You can change the speed by turning this knob. The further you turn this clockwise, the higher the speed of the unit will be.

3-2 Safety, Alarm and Warning functions

This product has the following safety functions.
When any abnormality occurs, take appropriate measures by referring to the section “Causes and solutions of troubles” on P.19 .

Safety function

Safety device	Operation	Causes	Solutions
Fuse	Melts and turns power off.	Over current flew.	Contact your dealer or the nearest service center. ※The device is installed in the board and the user is not allowed to replace it.
Current restriction circuit (overload)	Rotation indication flashes. (Operation continues at a lower speed)	The motor was subjected to a load beyond the rating.	Reduce load.
Lock protection	Stops the motor.	The motor output axis was locked (seized) from overloading.	Reduce load or eliminate the cause of lock.
Thermal protector (Overheat protection circuit)	Shuts off current to the motor.	The motor overheated during continued operation under overload.	Allow the unit to cool down (about 30 minutes).

Alarm function

※Alarm indication[A-**] : Appears to notify the operator of a tentative malfunction.

A-18	Operation	Stops rotation (motor). Digital displays indicates an alarm.
[A-18] Overheat alarm	Causes	Continued operation under overload resulted in overheat of the motor or the control board beyond the specified temperature.
	Solutions	After the unit has cooled down (about 30 minutes), restart it (turn power on again).

A-19	Operation	Stops rotation (motor). Digital displays indicates an alarm.
[A-19] Overcurrent alarm	Causes	Current restriction circuit(overload) caused the motor speed down below 10rpm for two or more seconds consecutively.
	Solutions	After reducing load, restart it (turn power on again).

A-20	Operation	Stops rotation (motor). Digital displays indicates an alarm.
[A-20] Overvoltage alarm	Cause	Source voltage to the unit is high.
	Solution	Turn the power switch OFF and check that the source voltage is within the commercial source voltage (or AC100V)±10%.

A-21	Operation	Stops rotation (motor). Digital displays indicates an alarm.
[A-21] Low voltage alarm	Cause	Source voltage to the unit is low.
	Solution	Turn the power switch OFF and check that the source voltage is within the commercial source voltage (or AC100V)±10%.

Alarm function

※ Alarm indication[F-**] : Appears when an abnormality that is detected from a malfunction of a part requiring repair.

F-4	Operation	Stops rotation (motor). Digital displays indicates an alarm.
[F-4] Rotation sensor error alarm	Cause	Abnormality (disconnection, malfunction) occurred to the rotation detection sensor.
	Solution	Replacement of the motor (rotation motor) is necessary.

3-3 About the protection function

3-3-1 Thermal protector (Overheat protection circuit)

(1) Continued overload operation raises the motor or the control board temperature and when the temperature detection element on the board detects that the temperature has reached the threshold, the protection circuit will activate and shuts off current to the motor. The display will indicate [A-18](Overheat alarm).

(2) To recover, turn the power switch OFF once and wait until the motor or the control board temperature cools down.

(3) Operation may be resumed when the motor temperature drops below the specification. (Rough standard: About 30 minutes) When you operate the unit again, lower the load than the setting when the overheat protection function was activated.

3-3-2 Current restriction circuit

(1) When load exceeded the permissible range from its fluctuation during stirring, the circuit automatically lower the stirring speed to prevent overloading.
During deceleration from overload, the current speed flashes in the display.

※ Precise Torque (load) detected is not necessary precise and overload might be detected and the speed might flash even during normal operation.

(2) While the speed is flashing, you can operate the speed control knob to decelerate the speed and stop flashing.

(3) Current restriction circuit keeps the stirring speed at 10rpm or below and overload does not improve, the display will show [A-19](Overcurrent alarm) and the motor will stop.

(4) To cancel the alarm, turn the power switch OFF once, reduce load and then restart the unit.

4 Installation

4-1 Installation environment

WARNING

Do not install the product in a potentially hazardous location.

This products is not designed with explosion-proof structure. Using the unit in a potentially hazardous location may cause a fire.

CAUTION

Install the product in the appropriate installation site.

Installing the product in he inappropriate location may accelerate the deterioration of the product or worsen the functions.

Select the installation site that meets the following conditions.

- Securely install using a special stand base (model ZS) or the existing angle on a level and stable surface.
- No inflammable solid or liquid or gas around the unit.
- Ambient temperature must be from 5 to 35℃.
- No dew condensation
- Lesser humidity and no dripping on the unit.
- Lesser dust
- No direct sun light
- Well-ventilated

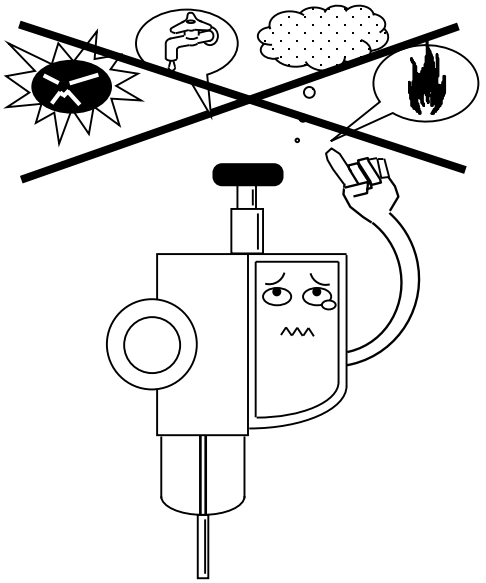

4-2 Installation conditions

CAUTION

Assure certain space around the unit.

Be sure to assure space between the unit and the walls and the ceiling as shown in the figure to maintain the performance of the product.

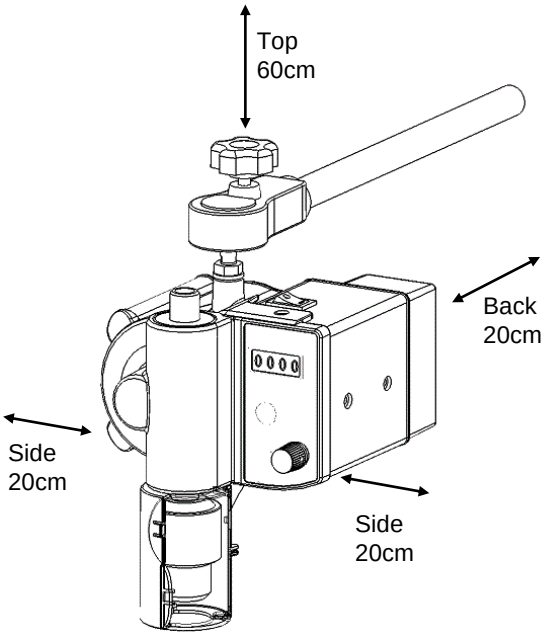

4-3. Connecting the utilities

⚠ WARNING

Confirm the voltage, phase, capacity, and the type of receptacle of power supply.

Wrong connection of power supply may cause fire or electric shock

⚠ WARNING

Do not use the branching socket or table tap.

It may cause burnout of burn out of cables or a fire from overcurrent.

⚠ WARNING

Be sure to connect the earth wire.

Failure to connect the earth wire may cause an electrical shock.

⚠ WARNING

Connect the earth wire correctly.

Never connect the earth wire to the gas pipe or water pipe to prevent electric shock.

(1) Check the voltage, phase and capacity of the power source. Required power source is as shown in right table.

(2) Check the receptacle of installation place.

Prepare a receptacle g with earth

※Do not connect the power plug in this stage.

※ Check that the sheath of the power cord is not damaged.
A damaged cord may cause an electrical shock.

※ Do not use a branching socket or a power strip for connection to the power supply.

Power supply for connection	
Voltage	Current
AC100V	15A

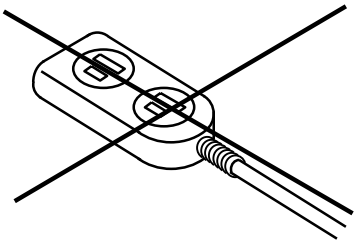

Power cord specifications (common for all models)

Model	Cable		Section area of cable(AWG)
	Length	Thickness (O.D.)	
ZZ-1000 ZZ-1010 etc.	Approx.2.0m	Approx.7.4mm	0.75mm^2(AWG18)

5 Operation

5-1 Preparing for operation

5-1-1 Installing the main unit

(1) Loosen the knob bolt on the stand base, insert the pole and retighten the bolt to securely fix the pole.

※The stand base and the pole are not included with the product.

＜Stand base set＞

Code No	Model	Pole size [mm]
158710	ZS	φ22× 780
203190	ZS-2	φ22×1200

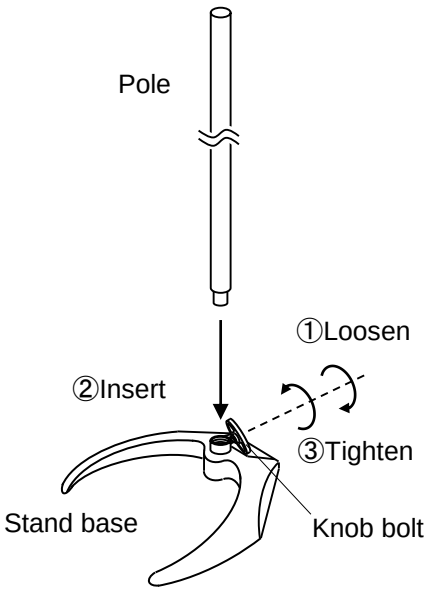

⚠ Caution

Take sufficient care during transportation

The stand base is heavy.
Hold both the pole and the base for transportation
If you hold only the pole, the base may drop and cause a personal injury.

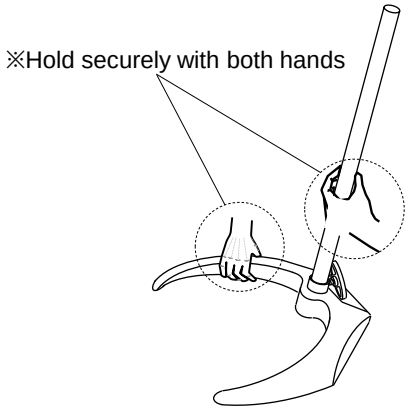

⚠ Warning

Securely fix the clamp

Loose tightening of the clamp may allow the stirrer to vibrate and fall off.

(2) Install the clamp included with the product to the pole of the stand base assembled in (1) or to the existing angle and the securely tighten the knob bolt of the clamp to fix.

※Possible angle diameter of the clamp：O.D.8～22mm

(3) Insert the arbor of the main unit through the clamp and then securely tighten with the knob bolt to fix.

Support the main unit with a hand during fixing work to prevent it from falling.

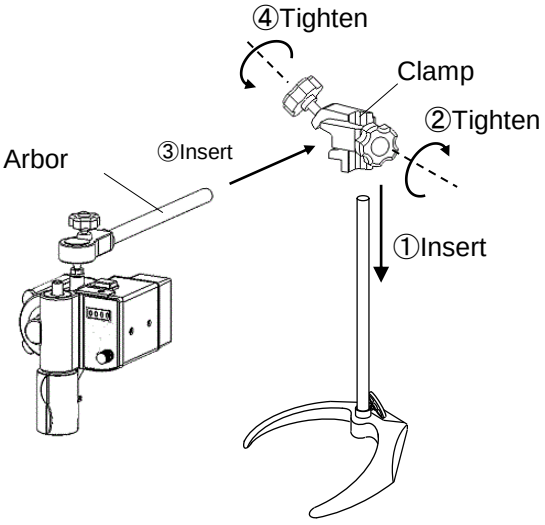

5-1-2 How to open/close the chuck cover

⚠ Caution

Do not open/close the chuck cover during operation

If the chuck cover opens or closes while the chuck is rotating, touching it might cause a personal injury.
Be sure to check that rotation has stopped before opening the cover for replacing the shaft or other works.

※ Be sure to open or close the chuck cover only after turning power of the unit OFF.

(1) Using fingers, open the chuck cover slightly.
※The open-preventive claw at the front of the cover is disengaged and the lock is released.

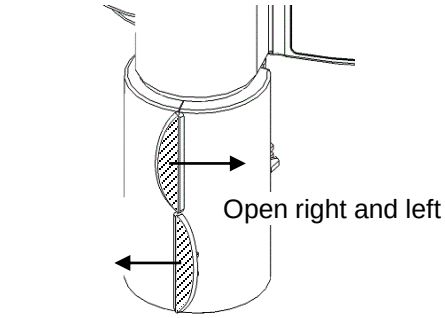

(2) Open the right and left covers widely until the protrusion on the back enters into the center groove in the cover.

※When it is completely in the groove, the cover will be kept open enabling easier work.

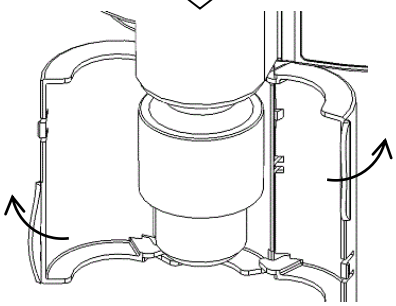

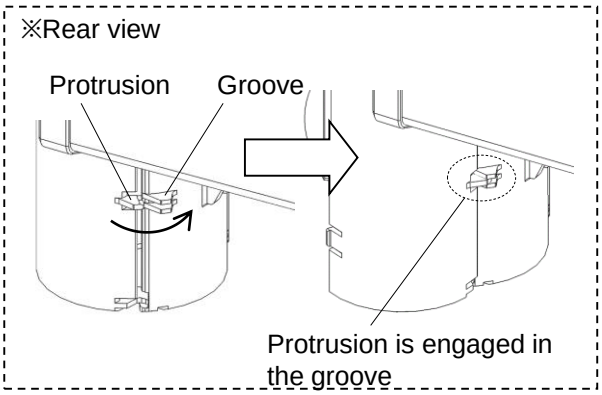

(3) Push the whole chuck cover assembly backward.

(4) Follow the procedures (1) to (3) above in the reversed order to put the cover over the chuck.

※ You will hear a click when the chuck cover claw is engaged.
If no click is heard, it is not engaged and the chuck cover may open during operation. In this case, open it once and then close the chuck cover again.

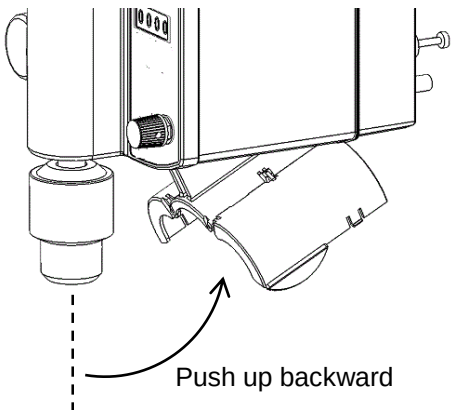

5-1-3 Preparing the stirrer blade and the stirrer bar

※ ”P.23 10.List of consumable and replacement parts” shows a list of stirrer blades and stirrer bars recommended by us.

⚠ Warning

Use the specified stirrer blades only

Never use a stirrer blade other than those specified by us (in particular, larger ones), which might cause a malfunction of the stirrer.

＜ Stirrer bar for stirrer blade ＞

(1) Turn the fixing screw on the side of the stirrer blade anti-clockwise (left) to loosen.

※You do not have to remove the screw.

※The fixing screw is a very small part.
Take care not to lose it by loosening it overly.

(2) Insert the stirrer blade through the stirrer bar.

(3)Loosen the fixing screw on the side of the stirrer blade clockwise (right) to tighten to fix it to the stirrer bar.

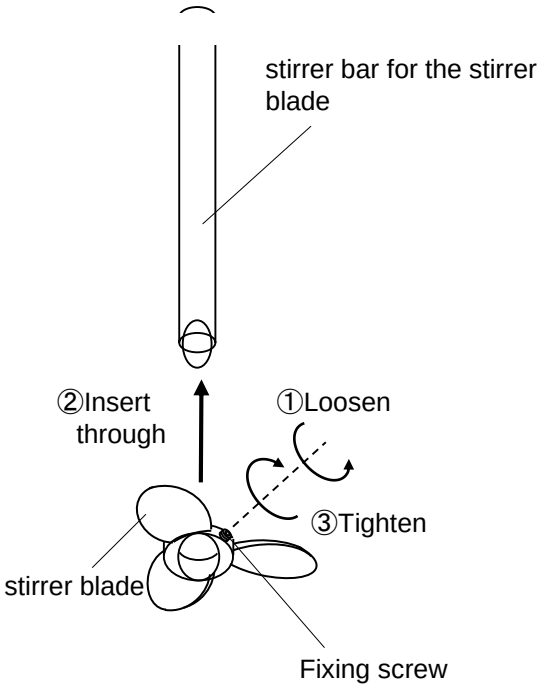

＜ Stirrer bar with screw＞

※ This is an accessory to the model with a stirrer bar and a stirrer blade 【ZZ-1□00S】.

⚠ Caution

Do not use a stirrer bar with a screw on models with the reverse function

The stirrer blade may drop off on reversal causing damages to containers or a personal injury.

(1)Insert the screw through the hole of the stirrer blade.

(2)Turn the screw clockwise (right) into the screw hole at the tip of the stirrer bar and sand the stirrer blade to fix.

※Align the hole shape of the stirrer blade with the screw shape before fixing.

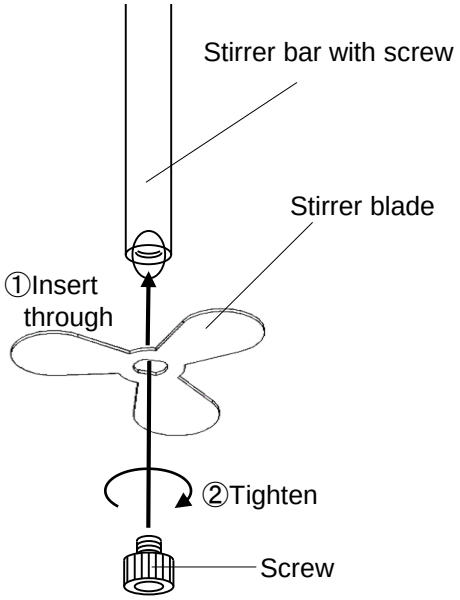

5-1-4 How to install and remove the stirrer bar

ZZ-1000 ZZ-1000S ZZ-1100 ZZ-1100S
ZZ-1200 ZZ-1200S ZZ-1300 ZZ-1300S

⚠ Caution

Securely tighten the drill chuck

Securely install the stirrer bar to the chuck and fix with the chuck handle.
If it is not secured, the stirrer bar may slip or drop off and damage the reagent containers or cause a personal injury.

⚠ Caution

Do not use a warp stirrer bar or install it off-centered.

Operating the unit with a warp stirrer bar or installed off-centered may cause the unit vibrate, damage the reagent containers or the unit to fall off.

＜How to install (drill chuck)＞

(1) Turn the chuck clockwise (right) stirrer bar with a hand while holding it with a hand to prevent it from coming off-center and lightly fix the stirrer bar.

※Insert the stirrer bar at least to the middle point of the whole length. If it is unfeasible, insert the bar so that it is protruding above the top of the unit.

(2) You can install without off-centering by turning the stirrer bar right and left for 2 to 3 times when the chuck is lightly tightened.

(3) Insert the chuck handle into the hole with a "○" mark and securely tighten.

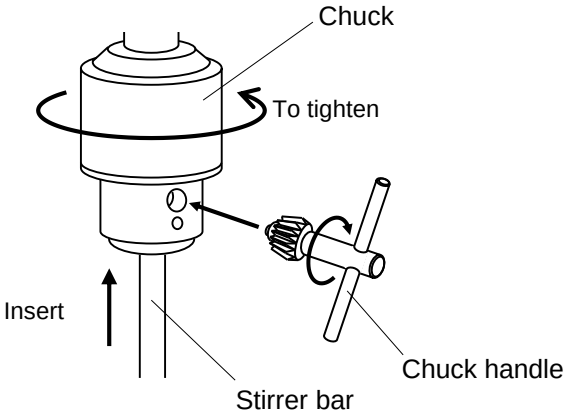

＜How to remove (drill chuck)＞

(1) Insert the chuck handle into the hole with a "○" mark while holding it with a hand and turn the chuck anti-clockwise (left) .

(2) When the chuck is loosened and the claw has opened, gently pull out the stirrer bar downward.

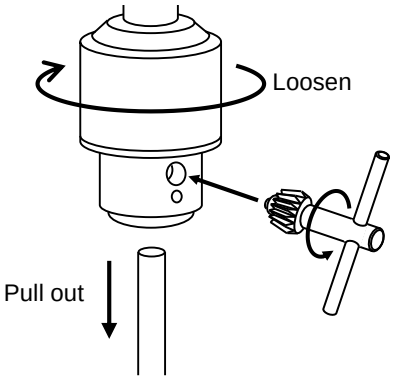

ZZ-1010 ZZ-1110 ZZ-1210 ZZ-1310

⚠ Caution

Take care for the O.D. of the stirrer bar to use

Collet chuck only supports stirrer bars with a specified O.D. and cannot tighten other bars.
Be sure to check the O.D. of the stirrer bar before use. (Standard O.D. : φ8)

⚠ Caution

Securely tighten the collet chuck

Use a stirrer bar of the same as the collet and turn it to fix securely.
If it is not fixed securely, it may slip, drop off, damage the reagent containers and cause a personal injury.

⚠ Caution

Do not use a stirrer bar with a screw on models with the reverse function

Use of a stirrer bar with a screw shown below may cause the stirrer blade to drop off on reversal causing damages to containers or a personal injury with broken pieces.

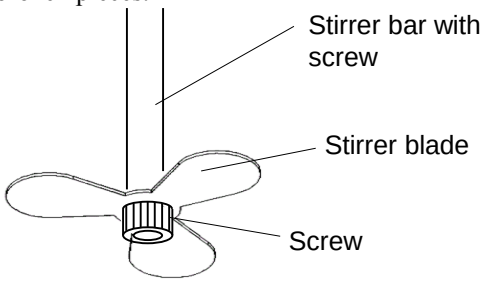

⚠ Caution

Check the collet size

When the size of the stirrer bar and of the collet, the bar may not be fixed securely and it may slip, drop off, damage containers and their pieces may cause a personal injury.

⚠ Caution

Do not use a warp stirrer bar or install it off-centered.

Operating the unit with a warp stirrer bar or installed off-centered may cause the unit vibrate, damage the reagent containers or the unit to fall off.

⚠ Caution

Check for flaws or dirt on the collet or the stirrer bar

Use of a collet or a stirrer bar with an apparent flaw or dirt on its surface may prevent the collet from tightening evenly and lead to slip of the stirrer bar. Continuing operation with that state may lead to damages to parts or devices, contamination of metal chips into reagents, or off-centering of the stirrer bar.

＜ How to install (Collet chuck) ＞

※Check for flaws or dirt on the surface of the stirrer bar.
Dirt or flaws may prevent it from properly installing to the collet chuck.

(1) Loosen the collet chuck by turning the nut cover anti-clockwise (left) while holding the holder cover.

(2) After inserting the stirrer bar slowly, loosen the nut cover by turning it clockwise (right) to fix the stirrer bar.

※ You may not able to insert the stirrer bar even if you loosen the collet chuck.
This is because the collet inside is engaged with the holder cover, which can be released by slowly inserting the stirrer bar from above until it lightly hits and then lightly hit the collet to disengage it.

※Insert the stirrer bar at least to the middle point of the whole length. If it is unfeasible, insert the bar so that it is protruding above the top of the unit.

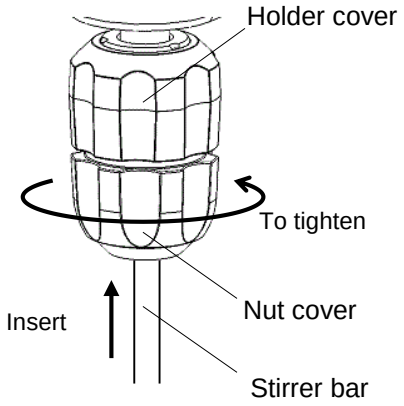

＜ How to remove (Collet chuck) ＞

(1) Loosen the collet chuck by turning the nut cover anti-clockwise (left) while holding the holder cover.

(2) When the chuck is loosened, gently pull off the stirrer bar downward.

※ You may not able to pull out the stirrer bar even if you loosen the nut cover collet chuck.
This is because the collet inside is engaged with the holder cover.
In this case, loosen the nut cover further and repeat pulling the stirrer bar several times to disengage the collet.

If this does not work, remove the collet by referring to the section “P.16 5-1-5 How to replace the collet”.

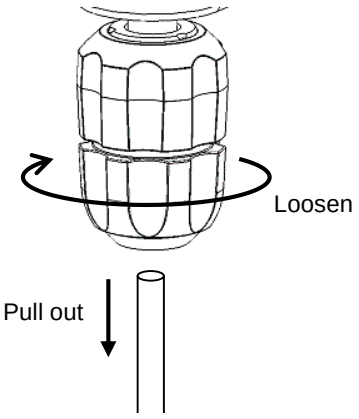

5-1-5 How to replace collets

ZZ-1010 ZZ-1110 ZZ-1210 ZZ-1310

⚠ Caution

Check for flaws or dirt on the collet

Do not use a collet or a stirrer bar with an apparent flaw or dirt on its surface which may prevent the collet from tightening evenly and lead to slip of the stirrer bar.
Continuing operation with that state may lead to damages to parts or devices, contamination of metal chips into reagents, or off-centering of the stirrer bar.

(1) Loosen the nut cover by turning anti-clockwise until the drop-off preventive screw on the side is exposed while holding the holder cover.

(2) Loosen the drop-off preventive screw with a precision screwdriver.

※You do not have to remove the screw.

※Drop-off preventive screw is a very small part. Take care not to lose it by loosening it excessively.

※Precision screwdriver is not included. The user shall prepare them.

(3) Loosen the nut cover further and gently remove the cover and the collet.

(4) Take out the collet out of the nut cover and replace with a correct collet.

＜List of replacement collet＞

Code No	Product name	Supported shaft dia.(mm)
256100	Colletφ4	φ3～4
256110	Colletφ6	φ5～6
256120	Colletφ8(standard)	φ7～8
256130	Colletφ10	φ9～10

※ Collet I.D. corresponds to product names. Check the size before replacement or check if the size is correct by inserting it through the stirrer bar.

(5) After inserting the collet into the nut cover, turn the cover clockwise (right) until just before the drop-off preventive screw is hidden to fix it to the holder cover.

(6) Securely tighten the drop-off preventive screw with a precision screwdriver and turn the nut cover clockwise (right) only slightly to tighten.

※Excessively tighten the nut cover without a stirrer bar will make the collect engaged with the holder cover, which might prevent the collet from disengaging and you cannot insert a stirrer bar by loosening the nut cover.
In this case, remove the nut cover out of the holder cover and pull out the collet.
Or by slowly inserting the stirrer bar from above until it lightly hits and then lightly hit the collet to disengage it.

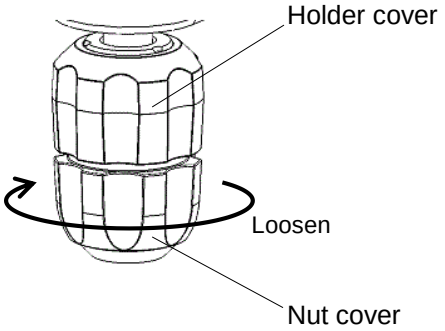

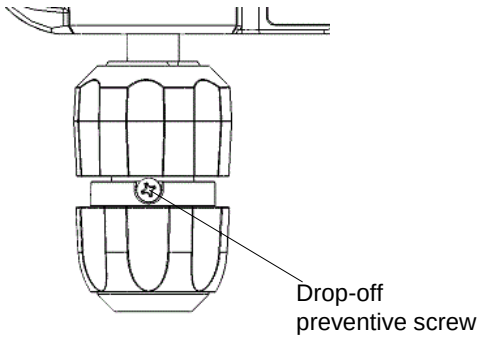

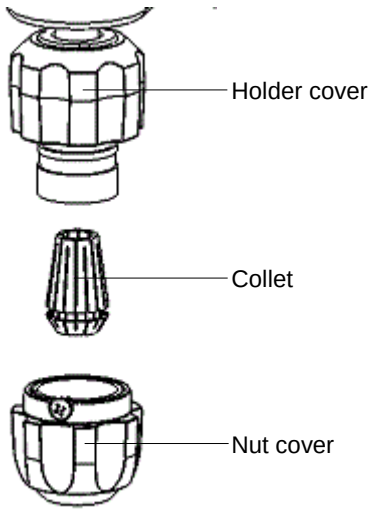

5-1-6 Air purge

⚠ Caution

Avoid applying stress on the tube

Applying stresses to the tube such as tension, twist or a sharp bend may cause damages or coming-off of it.

⚠ Caution

Keep the introduction pressure to 0.01MPa (0.1kgf/cm^2) or lower of a gauge pressure

Introducing highly pressurized air might damage the stirrer.

⚠ Caution

Use high quality air

Use of air that contains oil, humidity or corrosive gas may cause a malfunction.
Use a filter or a dryer to remove any foreign objects in air to introduce.

This unit has an air purge port on the back.
You can prevent corrosive gas from entering into the unit by introducing pressurized air at 0.01MPa or below at the air purge port. Use this function as necessary.

＜Tube to use＞

Use a pneumatic piping tube having an O.D. of 6mm. Also check that the tube meets the following conditions.

- The cut surface is square.
- There is not flaw on the outer surface.
- The section is not of an oval shape.

Also check precautions for the tube before use.

＜Back of the unit＞

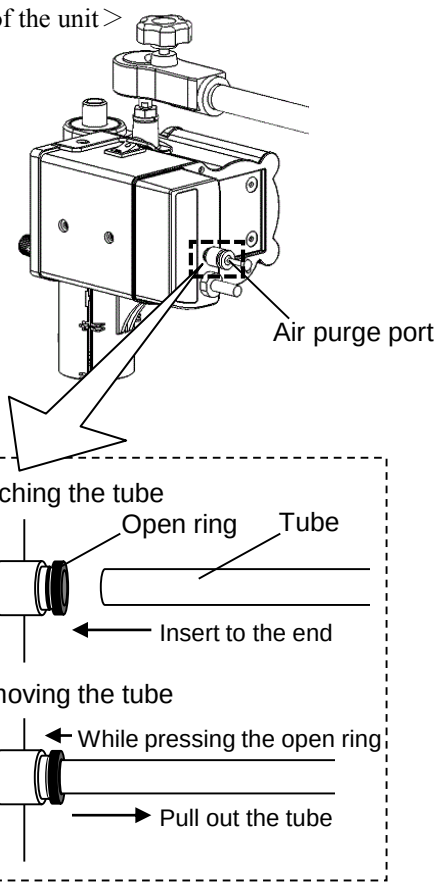

＜Installing a tube＞

(1)When a plug is attached to the air purge port, pull out the plug while pressing the open ring.

※ Store the removed plug securely since it will be used when air purge is not performed.

(2) Insert the tube into the air purge port until it stops.

(3)After attachment, lightly pull the tube to make sure it will not come off.

(4)Introduce pressurized air of 0.01MPa or less.
Use high quality air free of oils or humidity.

＜Removing a tube＞

(1) Stop air supply.

(2) Pull out the tube while pressing the open ring of the air purge port.

※Leave the air purge port inserted when air purge is not carried out.

5-1-7 Adjusting the position of the main unit

Loosening the arbor knob bolt will also loosen the main unit and you can freely adjust its angle and the position.
After adjustment, tighten the bolt to securely fix the main unit.

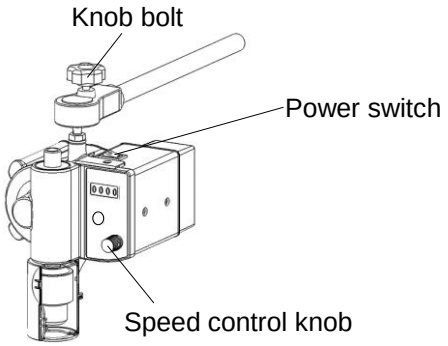

5-1-8 Connecting the power plug

Make sure that the power switch is OFF, turn the Speed control knob to the left most and connect the power plug to an outlet.

5-2 Operating methods

⚠ Caution

Stop operation when an abnormality occurs

When an abnormality occurs, immediately turn the power switch OFF and refer to the section "P.19 Causes and solutions of troubles".

※ Make sure that the chuck cover is closed and the speed control knob is at the leftmost end before starting operation.

(1) Turn the power switch ON.
The display will come on.

※ Note that if the speed control knob is not at the leftmost position, turning the power switch ON will start rotation of the stirrer blade.

(2) While observing the display, slowly turn the speed control knob until the speed you want is obtained.
The more you turn it clockwise, the faster the rotation will be.

※For a model with the reverse function【ZZ-1□10】

Each time you press the [Fow/Rev], the rotation direction will change. (Left→Right→Left→…)
Set a rotation direction you want before starting operation.

※ Be sure to reduce the speed before changing the direction.
Suddenly changing the direction during stirring (rotation), load will be applied to the gears and cause wear.

(3) TO finish, turn the speed control knob leftmost and stop operation then turn the power switch OFF.

※ Make sure that the display has turned off completely before turning power on again.

Procedure after operation

If you are not going to use the unit for an extended period of time, turn the switch OFF and remove the power plug off the outlet.

⚠ Caution

Fix the stirrer container before use

Fix the container since high viscosity material may be used or some material will increase their viscosity during stirring causing the container to move.

⚠ Caution

Keep the chuck cover closed during operation

Never fail to close the chuck cover beforehand to prevent hair, clothing or hands from being caught with the drill chuck or the collet chuck.

⚠ Caution

Do not move or transport the unit during operation

Be sure to stop operation before moving or transporting the unit when touching the rotating assembly might cause a personal injury.

⚠ Caution

Do not keep operating at the maximum performance

Stirring under a higher load at a high temperature might shorten the use life of the stirrer. Assure sufficient performance margin, in particular, at a higher temperature.

6 Causes and solutions of troubles

Contact your dealer or the nearest service center for troubles not listed here.

Symptom	Causes	Solution
Turning the power switch ON will not show anything on the display.	The power plug has come off from the outlet. Or it is not securely inserted.	Turn the power switch OFF and insert it to an outlet.
	Power is not supplied.	Turn the ELB on the distribution board ON.
	The fuse is blown. (It is installed inside the product and cannot be checked from outside.)	Stop operation immediately and contact your dealer of the nearest service center.
	The board is defective.	
Does not rotate even if the speed control knob is turned. (Display shows [A-18])	The thermal protector (Overheat protection circuit) activated from overload.	Turn power OFF once and allow the motor to cool down (about 30 minutes) First reduce load and then restart the unit.
Does not rotate even if the speed control knob is turned(Display shows [A-19])	The motor spindle locked from overload.	Turn the power OFF once, reduce load and then restart the unit.
Does not rotate even if the speed control knob is turned(rotation lamp on) (Display shows the speed)	Gear for conveying rotation from the motor is damaged.	Stop operation immediately and contact your dealer of the nearest service center.
	The speed control volume is malfunctioning.	
	The board is defective.	
Does not rotate even if the speed control knob is turned(Display shows [F-4])	The motor rotation sensor is malfunctioning.	
Speed dropped suddenly.	Current restriction circuit(overload) activated.	Turn the power OFF once, reduce load and then restart the unit.
Abnormal sound is heard from the unit. The unit is vibrating excessively.	Gear for conveying rotation from the motor is damaged.	Stop operation immediately and contact your dealer of the nearest service center.
	The motor is malfunctioning.	
Display shows [A-20]	Source voltage to the unit is high.	Make sure that the source voltage is within the commercial power supply(or AC100V) ±10%.
Display shows [A-21]	Source voltage to the unit is low.	
The stirrer bar cannot be removed by loosening the collet chuck.	The collet is engaged and cannot be loosened.	See the section “How to remove (Collet chuck)” on P.15.

7 Maintenance and Inspection

7-1 Cleaning and care of the product

⚠ Warning

Never attempt to disassembly the product.

The unit contains parts with high voltage applied or may become hot, and disassembly may cause an electrical shock or an injury.

⚠ Warning

Do not clean and care the product while the unit is still hot.

Touching hot surface may burn your hands.

⚠ Caution

Do not leave the product in an undesirable atmosphere

Leaving the product at a place where acid or organic solvent density is high will cause discoloration of the finish of the product or peeling-off of the paint. It also accelerate corrosion of the board resulting in a malfunction.

⚠ Caution

Use a correct method and items for cleaning or caring the product.

When cleaning or maintaining the product, never splash water to the exterior or the inside directly, do not put any foreign materials and never use the cleanser, thinner, oil, kerosene, acid, and equivalent. Otherwise, the user may suffer electric shock or damage to the product.

(1) Before any maintenance work, turn the switch OFF and remove the power plug from the outlet.

(2) Use a moistened and well wriggled soft cloth for cleaning. Use milt detergent for stubborn dirt and completely wipe remaining detergent after cleaning.

⚠ Caution

Frequently remove dusts from the outlet

Operating the unit for a long time with connected to an outlet will cause dust to accumulate between the outlet and the power plug and may lead to a malfunction or a fire. (Tracking)

7-2 Adjusting the chuck cover

Repeated open/close of the chuck cover will make the connection to the main unit loose and may prevent fixing at a position you want.

If you notice loosening when you lift the chuck cover for replacing the stirrer bar, or the cover falls below the original position, turn the connection screw or the nut clockwise (right) to tighten and adjust the cover.

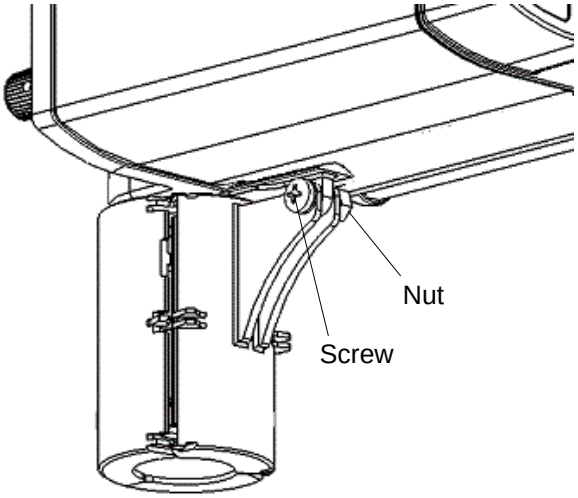

8 Disposal of the product

When disposing the product, please follow the instructions as below.

Main components and disposal instructions

Component	Model	Weight	External dimensions(including protrusions)	Method for disposing
Main unit	ZZ-1000	Approx. 2.5kg	130W×155D×158H (130W×172D×173H)	Request the disposal operator for disposal.
	ZZ-1000S			
	ZZ-1010			
	ZZ-1100	Approx. 2.5kg	130W×155D×158H (130W×172D×173H)	
	ZZ-1100S			
	ZZ-1110			
	ZZ-1200	Approx. 2.5kg	130W×155D×158H (130W×172D×173H)	
	ZZ-1200S			
	ZZ-1210			
	ZZ-1300	Approx. 2.5kg	130W×155D×158H (130W×172D×173H)	
	ZZ-1300S			
	ZZ-1310			

Component	Major components	Major materials
Main	Housing	Die-cast aluminum
	Chuck cover	PC
	Free clamp	Die-cast aluminum, stainless steel, brass
	Driving assy.	Stainless steel, aluminum, POM, MC-901, S45C, ABS, cupper

※When disposing of the product, separate materials according to the table above before disposal.

9 After-sale Services

1. In case the product does not function satisfactorily, check first by referring to the page on troubleshooting to see if this is actually a trouble.
2. If the product remains unsatisfactory even after checking, contact the shop from which the user has purchased the product or the service center described in the manual and request repair.
3. Repair during the guarantee period will be made according to the guarantee stipulations.
4. After expiration of the guarantee period, the charged repair will be made at the customer's request.

Warranty Provisions

1 The warranty period of your product is 12 months from the date of purchase.

2 We will repair or replace your product free of charge for troubles occurred in your product during proper usage in the warranty period.

3 This warranty is limited to the product itself and shall not be construed to cover all and any consequential losses (operating losses, various expenses, etc.) from malfunctions or troubles of the product.

4 The provisions of this warranty are valid only in Japan.
When you are going to indirectly export the product you purchased to a foreign country, the provisions shall be exempted from application provided that a certification be issued that the product is not subject to the export control regulations and, in such case, all liabilities in relation to the product shall be borne by the exporting party .

5 Repair shall be paid by the user even during the warranty period for the following cases.

a) The user did not return the customer card or made user registration at our HP within one month from the date of purchase.
b) This warranty card was not presented or user registration could not be confirmed at the time of request for repair.
c) When the dealer name is not sealed on the warranty card or the date of the purchase is not indicated on it.
d) Malfunctions or damages caused by handling that is against cautions in the manual or labels on the product, or transportation from the installation site after purchase, dropping during use, or shocks.
e) Malfunctions or damages caused by mishandling, unauthorized modification or repair by the user.
f) Malfunctions or damages caused by a fire, an earthquake, wind and flood, salt damage, lightening, or other Acts of God or external factor including the power supply.
g) Degrading of performance or malfunctions resulted from consumption of consumable parts or replacement of consumable parts.

6 Warranty conditions may differ depending on specific products. Check the warranty conditions stipulated in the warranty space in the operation manual.

7 Ask your dealer or the nearest sales office for repair for malfunctions after the warranty period.
（In principle, the retention period of repair parts is five years after the end of production.）

8 Product warranty for products sold overseas by our overseas sales department shall be separately specified.

10 List of consumable and replacement parts

■Stirrer blade

No.		No. 1	No. 2	No. 3	No. 4	No. 5	No. 6	No. 7	No. 8
Outer appearance		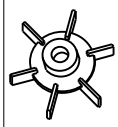			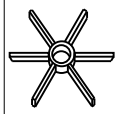		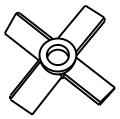	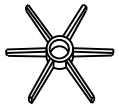	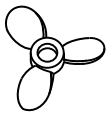
Name		Flat blade turbine	Curved flat blade turbine	Disc turbine	Fan turbine	Curved fan turbine	Angled fan turbine	Modified fan turbine	Marine blade
Axis dia. [mm]	Blade dia. [m]	Code No.	Code No.	Code No.	Code No.	Code No.	Code No.	Code No.	Code No.
8	30	121820	122000	122180	122360	122540	122720	122900	123080
	40	121830	122010	122190	122370	122550	122730	122910	123090
	50	121840	122020	122200	122380	122560	122740	122920	123100
	60	121850	122030	122210	122390	122570	122750	122930	123110
	70	121860	122040	122220	122400	122580	122760	122940	123120
	75	121870	122050	122230	122410	122590	122770	122950	123130
	80	121880	122060	122240	122420	122600	122780	122960	123140
	85	121890	122070	122250	122430	122610	122790	122970	123150
	90	121900	122080	122260	122440	122620	122800	122980	123160
	100	121910	122090	122270	122450	122630	122810	122990	123170
10	30	121920	122100	122280	122460	122640	122820	123000	123180
	40	121930	122110	122290	122470	122650	122830	123010	123190
	50	121940	122120	122300	122480	122660	122840	123020	123200
	60	121950	122130	122310	122490	122670	122850	123030	123210
	70	121960	122140	122320	122500	122680	122860	123040	123220
	80	121970	122150	122330	122510	122690	122870	123050	123230
	90	121980	122160	122340	122520	122700	122880	123060	123240
	100	121990	122170	122350	122530	122710	122890	123070	123250

■Stirrer blade (rev.)

No.		No. 6 (rev.)	No. 8 (rev.)
Outer appearance		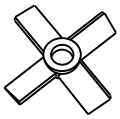	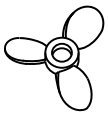
Name		Angled fan turbine	Marine blade
Axis dia. [mm]	Blade dia. [m]	Code No.	Code No.
8	30	123260	123360
	40	123270	123370
	50	123280	123380
	60	123290	123390
	70	123300	123400
	75	123310	123410
	80	123320	123420
	85	123330	123430
	90	123340	123440
	100	123350	123450

■Stirrer bar for stirrer blade ※1

Outer appearance		
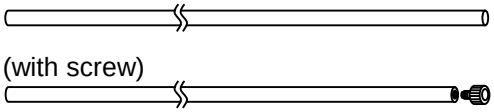 (with screw)		
Product No.	O.D. × length [mm]	Material
121720	8 × 495	SUS
121730	8 × 495 (with screw) ※2	
121760	8 × 800	
121770	8 × 995	
121780	10 × 495	
121800	10 × 800	
121810	10 × 995	

※1 Does not support a stirring seal (model TBO).
※2 Does not support model ZZ-□□10.

■Stirrer seal(vacuum stirrer) Model TBO

Code No.	Align	Outer appearance
121090	₮24	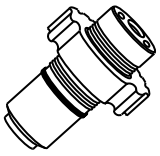
121100	₮29	
121110	₮34	
121120	₮40	

■Stirrer bar for stirrer seal

	Code No.	Material		O.D. × length (blade size) [mm]	Outer appearance
No stirrer blade	121520	SUS		8×450, no split ※1	①
	121560			8×495, with split	
	121570			8×600, with split	
	121490	Glass ※2		8×450	②
	121500			8×600	
	121510			8×800	
With stirrer blade	121590	All Teflon®	T- 1	8×450 (80W×17H)	③
	203210		T-11	8×600 (80W×17H)	
	203220		T-12	8×700 (100W×23H)	
	121600		T- 2	8×600 (120W×23H)	
	121610		T- 3	8×800 (150W×25H)	
	200210	All Teflon ® (anchor type)	T-1A	8×450 (60W×40H)	④
	200220		T-2A	8×600 (80W×60H)	

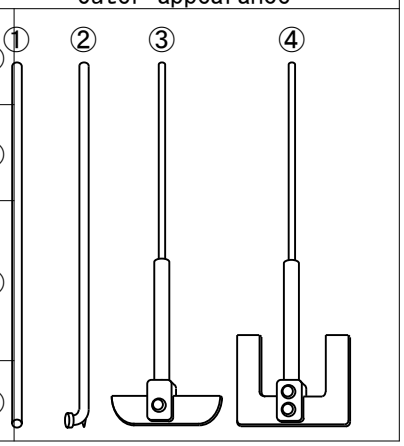

※1 In addition to a stirrer blade for stirrer seal, ordinary blades can be connected and used.

■Stirrer blade for stirrer seal

Code No.	Material	Model	Standard [mm]	Outer appearance
121450	SUS	G-1	58W×19H	①
121460		G-2	71W×19H	
121430	Glass ※2	E-1	58W×19H	②
121440		E-2	71W×19H	
121470	Teflon ®	F-1	58W×19H	
121480		F-2	71W×19H	

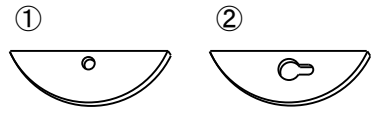

※2 When using on the model ZZ-1□10, it may break at reversal depending on the viscosity of the solvent. Stop stirring before attempting reverse operation and changing the stirring direction.

■Optional parts

①One-touch coupling (※3)

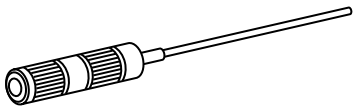

Code No	Type	Shaft dia. [mm]
123480	CW-1	φ6～φ10

②Flexible coupling (※3)

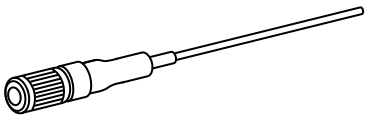

Code No	Type	Shaft dia. [mm]
123490	CF-1	φ6～φ10

③Flexible stirrer (※3)

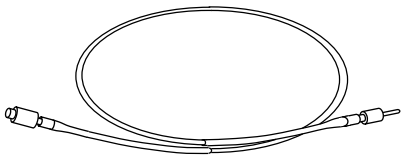

Code No	Type	Shaft dia. [mm]
123570	FS-1	φ1～φ8

④NZ clamp

(Usable on ZZ)

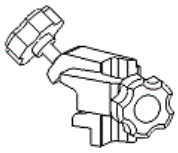

Code No	Type	Clamp dia. [mm]
203300	Model NZ	φ22 (MAX)

⑤Stand base

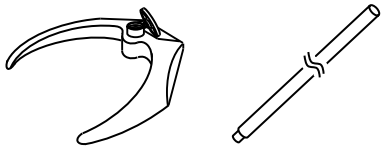

Code No	Type	Pole size [mm]
158710	ZS	φ22× 780
203190	ZS-2	φ22×1200

※3 Not usable on model ZZ-1□10.

■Replacement parts

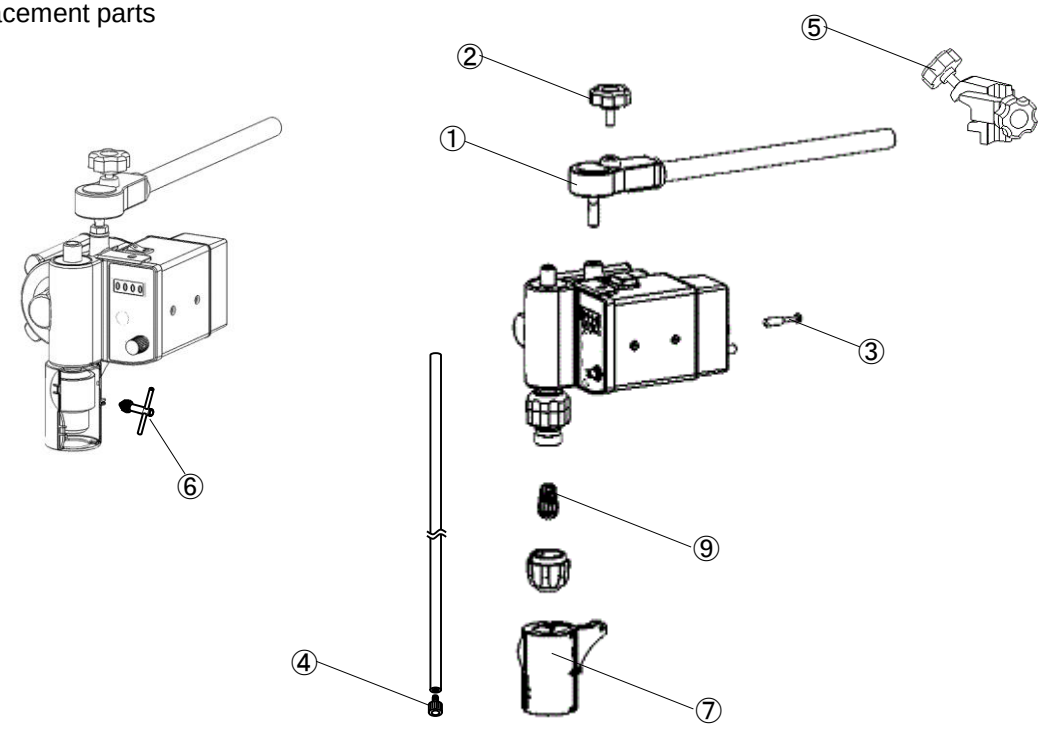

①NZ arbor

(Knob bolt shape differs from that of ZZ but can be used.)

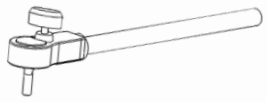

Code No	Arbor O.D.	Qty
203270	φ16	1

②Knob bolt for ZZ arbor

Code No	Standard	Qty
256140	M6	1

③Plug for NZ air purge

(Same as the accessory for ZZ)

Code No	Tube O.D.	Qty
203330	φ6	1

④Stirrer bar screw

(Same as the screw included with stirrer bar with screw)

Code No	Standard	Qty
203340	M5	1

⑤NZ clamp knob bolt

Code No	Standard	Qty
203310	M8	1

⑥NZ chuck handle

(Same as the accessory for ZZ-1000 series)

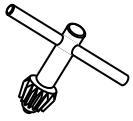

Code No	Standard	Qty
203320		1

⑦ZZ chuck cover

Code No	Material	Qty
256150	PC resin	1

⑧Collet

Code No	Product name	Supported shaft dia.[mm]	Qty
256100	Collet φ4	φ3～4	1
256110	Collet φ6	φ5～6	1
256120	Collet φ8 (standard)	φ7～8	1
256130	Collet φ10	φ9～10	1